Operating Instructions

Meade® #1244 Electric Focuser

For use with ETX-90 and ETX-105 Telescopes

The Meade #1244 Electric Focuser rapidly focuses eyepiece images in all ETX-90 and ETX-105 telescope models. The #1244 includes coarse and microfine speeds. The standard-equipment focuser 3-button hand controller accepts one user-supplied 9-volt battery.

If used with an ETX-EC Astro Telescope, the focuser functions are controlled directly with either the Electronic Controller (standard with the ETX-90EC or ETX-105EC) or with the optional #497 Autostar Computer Controller, rather than with the Focuser 3-button hand controller.

PARTS LIST

When opening the packing box for the first time, carefully note the following parts:

- Electric focuser gearbox with attached coiled cord
- Electric focuser 3-button hand controller
- Packed in a poly bag:
  - 1.75”-long hex-head screw
  - 1” diameter brass focusing gear
  - Mounting plate
  - Hex-wrench set (3 wrenches)

INSTALLATION

To attach the #1244 Focuser to the telescope:

1. Use the medium hex-wrench to remove the hex-head screw (**1, Fig. 1**) from the rear cell of the telescope. The screw is located above and slightly to the left of the focus knob (**2, Fig. 1**).
2. Use the small hex-wrench to loosen the set screw on the telescope’s focus knob (**2, Fig. 1**); remove the knob.

   NOTE: *Do not discard the hex-head screw removed in step 1 or the focus knob removed in step 2. If the #1244 Focuser is ever removed, these items must be re-installed on the telescope.*
3. Slide the center hole of the mounting plate (**2, Fig. 2**) over the focus shaft, so that the flat side faces the body of the telescope and the upper hole is aligned with the hole from which the hex-head screw was removed in step 1.

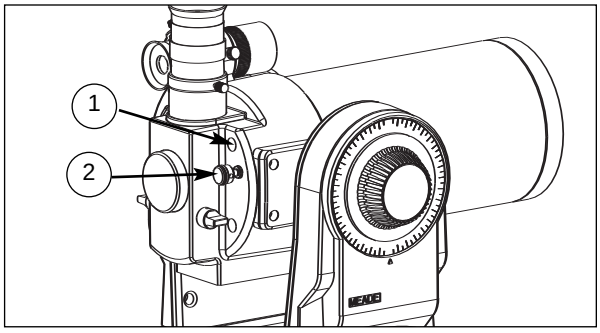

Fig. 1: Rear Cell of Telescope.
(1) Hex-head screw; (2) Focus knob.

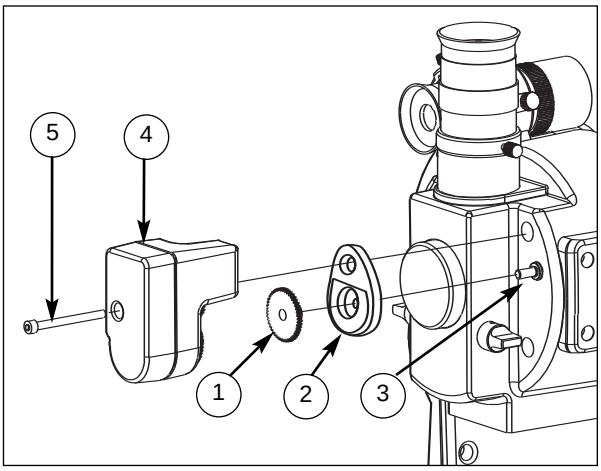

Fig. 2: Installation of the #1244 Electric Focuser.
(1) Focusing gear; (2) Mounting plate; (3) Focus shaft; (4) Focuser gearbox; (5) Hex-head attachment screw.

4. Place the focusing gear (**1, Fig. 2**) on the focus shaft (**3, Fig. 2**) so that the hub of the gear faces the body of the telescope and the gear is approximately flush with the rear of the shaft. Tighten the set screw on the focusing gear with the small hex-wrench.
5. Carefully place the electric focuser gearbox (**4, Fig. 2**) over the focusing gear. To orient the gearbox, the attached coiled cord should be on top. Slide the gearbox shaft into the hole from which the hex-head screw was removed in step 1. The focusing gear (**1, Fig. 2**) fits into the round slot in the gearbox.

6. Place the 1.75”-long hex-head screw (**5, Fig. 2**) into the hole in the rear of the focuser gearbox. Tighten the screw to a firm-feel only using the large hex-wrench.

7. Insert one user-supplied 9-volt battery into the compartment on the rear of the hand controller. Plug the coiled cord of the gearbox into the hand controller.

The focuser is now ready for operation.

OPERATION

The #1244 Electric Focuser may be used with the standard-equipment 3-button hand controller, with the Electronic Controller handbox that is included as standard equipment with the ETX-90EC or ETX-105EC, or with the optional #497 Autostar Computer Controller. See the appropriate controller below for details.

> ***NOTE:*** *If using the Electronic Controller or the Autostar Controller, detach the coiled cord from the focuser 3-button hand controller and plug it into one of the AUX ports of the telescope’s Computer Control Panel. Flip the power switch to ON.*

- **Electric Focuser Controller:** The hand controller has two speeds of operation: coarse and microfine. Press the SPEED key to change the focus speed. The Left Arrow moves the focus out and the Right Arrow moves the focus in.

- **Electronic Controller:** After power is applied, the four LEDs flicker. Press any button so that only one light remains lit. Press the SPEED key to switch between the four available focus speeds.

  The focus speed is indicated by the four lights: the top LED is fastest and the bottom LED is slowest. Press IN and OUT to move the focus in or out.

- **Autostar Computer Controller:** After power is applied and Autostar has been initialized (*see the Autostar instruction manua*l), press and hold MODE for two seconds. The Focus menu displays.

  Press one of the Number keys to change the focus speed:

1, 2:	slow
3, 4, 5:	moderate
6, 7:	medium
8, 9:	fast

  The Down Arrow moves the focus out and the Up Arrow moves the focus in.

  Press MODE to exit the Focus menu.

If you have a question concerning use of the Meade **#1244 Electric Focuser,** call the Meade Instruments Customer Service Department at (949) 451-1450, or fax to (949) 451-1460. Customer Service hours are 8:30 AM to 4:30 PM, Pacific Time, Monday through Friday.

MEADE®
6001 Oak Canyon, Irvine, California 92618
(800) 626-3233 ■ www.meade.com

Ver. 0202

Part no. 14-4010-15